Verilog License Plate Recognition on FPGA

A plate license recognition system is implemented in Matlab and then it is implemented on FPGA Xilinx Spartan-6 using Verilog. Below is the test environment for the system on FPGA.

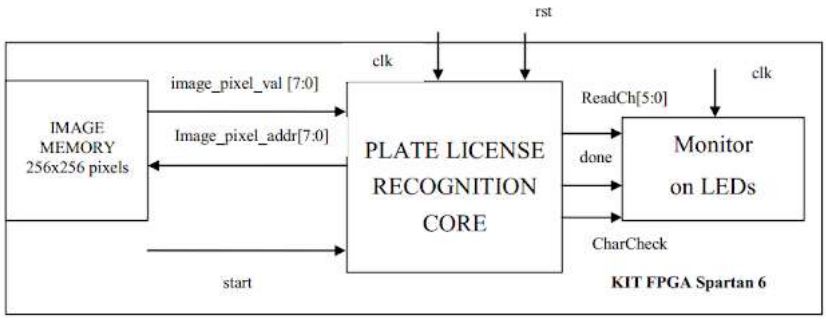

Image memory: 10 images and convert it into .dat format (gray data). We use $readmemh(synthesizable) Verilog command to initialize the memory by reading gray data from .dat file. 10 images are converted into Gray format and write to the .dat file by using Matlab.

Plate License Recognition core: Use a switch on FPGA as the "start" signal to trigger this core working and output the plate license numbers.

Monitor on LEDs: When the "done" signal is rising-edge, this block periodically displays plate license numbers.

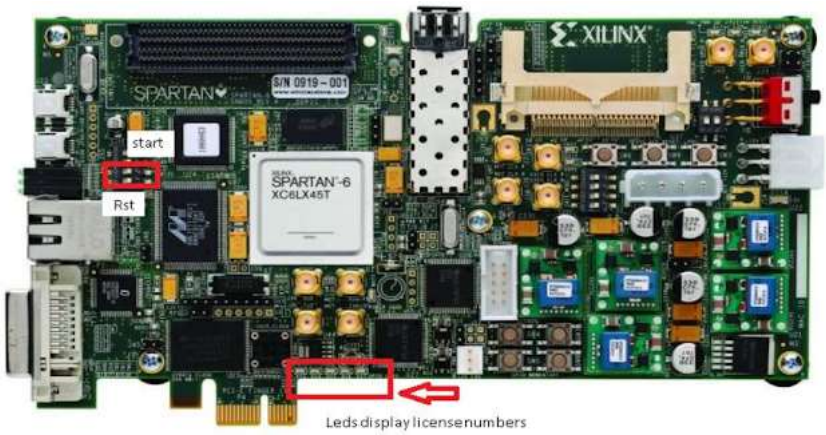

Top level Verilog code for testing the license plate recognition system:

```
// fpga4student.com FPGA projects, Verilog projects, VHDL projects
// Verilog project: License Plate Recognition in Verilog and Matlab
// Top level module for testing the license plate recognition system
module Test_top(input clk // 33MHz
                              ,rst, start,
                              output reg[5:0] led
   );
      reg [7:0] image_pixel_val;
      // Outputs
      wire done;  // fpga4student.com FPGA projects, Verilog projects, VHDL projec
      wire [15:0] image_pixel_addr;
      wire [5:0] ReadCh;
      reg[5:0] num1,num2,num3,num4,num5,num6,num7;
      reg [2:0] count,count_4s;
      wire CharCheck;
```

```
    reg clk_4s,display;
    integer counter;
    reg [7:0] image_inv [0:65535];
  // Instanitate the license plate recognition system
    LPChRec uut (
         .clk(clk),
         .rst(rst),
         .start(start),
         .image_pixel_val(image_pixel_val),
         .image_pixel_addr(image_pixel_addr),
         .ReadCh(ReadCh),
         .CharCheck(CharCheck),
         .done(done)
    );
  // Read License Plate Image file into FPGA
    initial begin
    $readmemh ("10.dat", image_inv, 0, 65535);
    end
    always @(posedge clk or posedge rst) // clock 4s
    begin
         if(rst) begin
              clk_4s <= 1'b0;
              counter <= 0;
              end
         else
         begin
              counter <= counter + 1;
              if(counter <= 66000000) clk_4s <= 1'b0;
              else if(counter > 132000000)
              begin
                   counter <=0;
              end
              else
              clk_4s <= 1'b1;
         end
    end
    always @(posedge clk)
    begin
         image_pixel_val <= image_inv[image_pixel_addr];
    end
// fpga4student.com FPGA projects, Verilog projects, VHDL projects
  always @(posedge clk or posedge rst)
    begin
         if(rst) begin
              count = 3'd0;
              num1 <= 40;
              num2 <=0;
              num3 <= 0;
              num4 <= 0;
              num5 <= 0;
              num6 <= 0;
              display <= 0;
              end
         else
         begin
              if(CharCheck) begin
              count = count + 1'd1;
              if(count==3'd1)
                   num1 <= ReadCh;
              else if(count==3'd2)
                   num2 <= ReadCh;
              else if(count==3'd3)
                   num3 <= ReadCh;
```

```
                else if(count==3'd4)
                     num4 <= ReadCh;
                else if(count==3'd5)
                     num5 <= ReadCh;
                else if(count==3'd6)
                     num6 <= ReadCh;
                else if(count==3'd7)
                     num7 <= ReadCh;
                else begin
                num1 <= 0;
                num2 <=0;
                num3 <= 0;
                num4 <= 0;
                num5 <= 0;
                num6 <= 0;
                end
                end
                if(done) display <= 1;
           end
      end
 // fpga4student.com FPGA projects, Verilog projects, VHDL projects
      always @(posedge clk_4s or posedge rst) begin
           if(rst) begin count_4s <= 0; led <=0; end
           else begin
           if(display) begin
           count_4s <= count_4s + 1;
           if(count_4s==0) led <= num1;
           else if(count_4s==1) led <=num2;
           else if(count_4s==2) led <=num3;
           else if(count_4s==3) led <=num4;
           else if(count_4s==4) led <=num5;
           else if(count_4s==5) led <=num6;
           else if(count_4s==6) led <=num7;
           else count_4s <= 0;
           end
           end
      end
 endmodule
```

Verilog code for License Plate Recognition System:

```
// fpga4student.com FPGA projects, Verilog projects, VHDL projects
// Verilog project: License Plate Recognition in Verilog
// Top level Verilog code for License Plate Recognition
module LPChRec(
   input clk,
   input rst,
   input start,
       input [7:0] image_pixel_val,
       output [15:0] image_pixel_addr,
   output [5:0] ReadCh,
       output CharCheck,
   output done
   );
 wire [7:0] ccl_th_low;
 wire [7:0] ccl_th_high;
 wire [7:0] image_pixel_val1;
 wire [15:0] image_pixel_addr1;
 wire [15:0] ImgAddr;
 wire [7:0] ImgVal;
 wire [7:0] ObjAddr1;
 wire [55:0] ObjInfo;
 wire                ccl_done,active;
 assign ccl_th_low = 8'd40;
```

```
 assign ccl_th_high = 8'd255;
 assign image_pixel_addr = (active)?ImgAddr:image_pixel_addr1;
 assign image_pixel_val1 = image_pixel_val;
 assign ImgVal                    = image_pixel_val;
// fpga4student.com FPGA projects, Verilog projects, VHDL projects
// Image processor unit
 image_processor image_processor_inst (
   .image_pixel_addr(image_pixel_addr1),
   .image_pixel_val(image_pixel_val1),
   .clk(clk),
   .rst(rst),
   .ccl_start(start),
   .ccl_th_low(ccl_th_low),
   .ccl_th_high(ccl_th_high),
   .ccl_done(ccl_done),
       .ccl_mem_result_addr(ObjAddr1),
       .ccl_mem_result_data(ObjInfo)
   );
// fpga4student.com FPGA projects, Verilog projects, VHDL projects
// Create object module
 CreateObj CreateObjInst (
   .clk(clk),
   .rst(rst),
   .start(ccl_done),
   .thresh(ccl_th_low),
   .ObjInfo(ObjInfo),
   .ImgVal(ImgVal),
   .ObjAddr1(ObjAddr1),
   .ImgAddr(ImgAddr),
   .Char(ReadCh),
   .CharCheck(CharCheck),
   .active(active),
   .done(done)
   );
 endmodule
```

Matlab Recognition Results:

Video Demo for the License Plate Recognition System on FPGA:

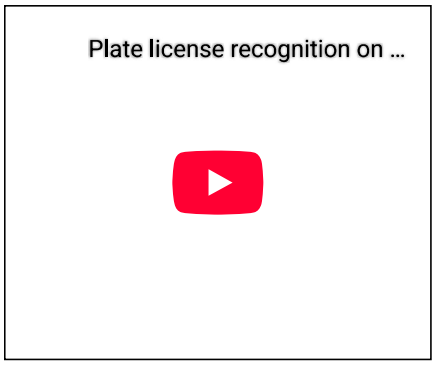

What is FPGA Programming? FPGA vs Software programming
Recommended and affordable Xilinx FPGA boards for students
Recommended and affordable Altera FPGA boards for students

Recommended Verilog projects:

1. **What is an FPGA? How Verilog works on FPGA**
2. Verilog code for FIFO memory
3. Verilog code for 16-bit single-cycle MIPS processor
4. Programmable Digital Delay Timer in Verilog HDL
5. Verilog code for basic logic components in digital circuits
6. Verilog code for 32-bit Unsigned Divider
7. Verilog code for Fixed-Point Matrix Multiplication
8. Plate License Recognition in Verilog HDL
9. Verilog code for Carry-Look-Ahead Multiplier
10. Verilog code for a Microcontroller
11. Verilog code for 4x4 Multiplier
12. Verilog code for Car Parking System
13. Image processing on FPGA using Verilog HDL
14. How to load a text file into FPGA using Verilog HDL
15. Verilog code for Traffic Light Controller
16. Verilog code for Alarm Clock on FPGA
17. Verilog code for comparator design
18. Verilog code for D Flip Flop
19. Verilog code for Full Adder
20. Verilog code for counter with testbench
21. Verilog code for 16-bit RISC Processor
22. Verilog code for button debouncing on FPGA
23. How to write Verilog Testbench for bidirectional/ inout ports
24. Tic Tac Toe Game in Verilog and LogiSim
25. 32-bit 5-stage Pipelined MIPS Processor in Verilog (Part-1)
26. 32-bit 5-stage Pipelined MIPS Processor in Verilog (Part-2)
27. 32-bit 5-stage Pipelined MIPS Processor in Verilog (Part-3)
28. Verilog code for Decoder
29. Verilog code for Multiplexers
30. N bit Adder Design in Verilog
31. Verilog vs VHDL: Explain by Examples
32. Verilog code for Clock divider on FPGA
33. **How to generate a clock enable signal in Verilog**
34. **Verilog code for PWM Generator**
35. **Verilog coding vs Software Programming**

DMCA PROTECTED

Privacy Policy | Disclaimer | Sitemap | Contact | Advertise Here
Copyright © 2016-2020 FPGA4student.com All Rights Reserved.